DMG-S32A24

320 Dots X 240 Dots	1/240 Duty	1/17 Bias

FEATURE

LCD TYPE	STN , FSTN	
LCM CONTROLLER IC	SED1335 or Equivalent	
LCM BACKLIGHT TYPE	LED , CCFL	
POWER SUPPLY FOR LCM	DC +5V	
LED BACKLIGHT INPUT	DC +5V	
FL INVERTER	FL001-5A / FL001-12A	
LCM DIMENSION	160.0 (W) X 109.0 (H)	mm
LCM VIEWING	122.0 (W) × 92.0 (H)	mm
ACTIVE DISPLAY AREA	115.17 (W) × 86.37 (H)	mm
LCD DOT SIZE	0.33 (W) × 0.33 (H)	mm
LCD DOT PITCH	0.36 (W) × 0.36 (H)	mm

ELECTRICAL

ITEM	SYM.	CONDITION	MIN.	TYP.	MAX	UNIT
Supply Voltage For Logic	V_{DD}-V_{SS}	Ta=25℃	4.5	5.0	5.5	V
Supply Voltage For LCD Driver	V_{LCD}	Ta=25℃	22.7	23.0	23.3	V
Input High Voltage	V_{IH}	--	2.2	--	V_{DD}	V
Input Low Voltage	V_{IL}	--	0	--	0.6	V
Supply Current For Logic	I_{DD}	V_{DD} =+5V	--	7.0	10.0	mA
LED Current	I_F	Ta=25℃	--	208	--	mA

ABSOLUTE MAXIMUM RATINGS

ITEM	SYM.	MIN.	TYP.	MAX.	UNIT
OPERATING TEMP.	T_{OP}	-20	--	+70	℃
STORAGE TEMP.	T_{ST}	-30	--	+80	℃
INPUT VOLTAGE	V_I	V_{SS}		V_{DD}	V
SUPPLY VOL. FOR LOGIC	V_{DD}-V_{SS}	--	5.0	6.5	V
SUPPLY VOL. FOR LCD	V_{DD}-V_O	--	23.0	28.0	V

BLOCK DIAGRAM

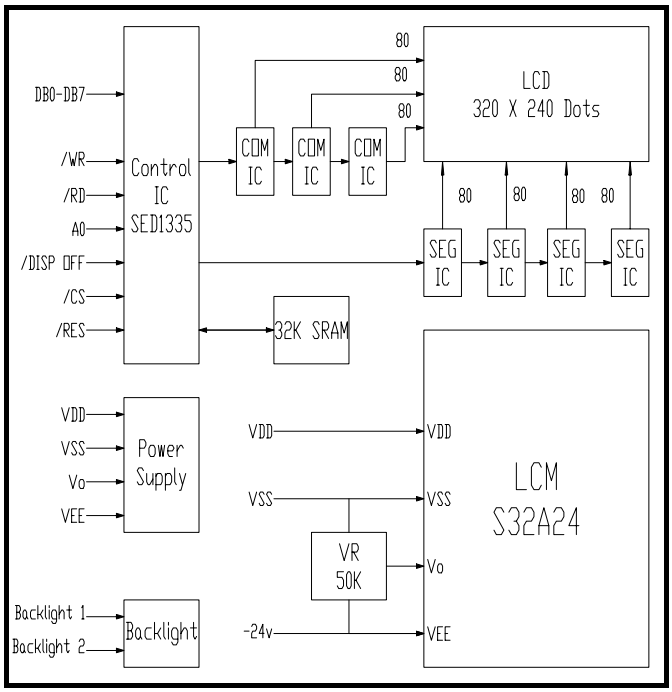

INTERFACE PIN CONNECTIONS

NO.	SYM.	LEVEL	FUNCTION
1	/RES	L	Reset signal
2	/RD	L	DATA read
3	/WR	L	DATA Write
4	/CS	L	CHIP select
5	A0	H/L	Data/Instruction code
6	DB0	H/L	Data Bit0
7	DB1	H/L	Data Bit1
8	DB2	H/L	Data Bit2
9	DB3	H/L	Data Bit3
10	DB4	H/L	Data Bit4
11	DB5	H/L	Data Bit5
12	DB6	H/L	Data Bit6
13	DB7	H/L	Data Bit7
14	VDD	--	VDD(+5V)
15	VSS	--	GND(0V)
16	VEE	--	Negative Voltage
17	Vo	--	Contrast Adjust
18	/DISP OFF		Display off signal
19	LED-A	--	LED-A (DC+5.0V)
20	LED-K	—	LED-K (DC 0V)
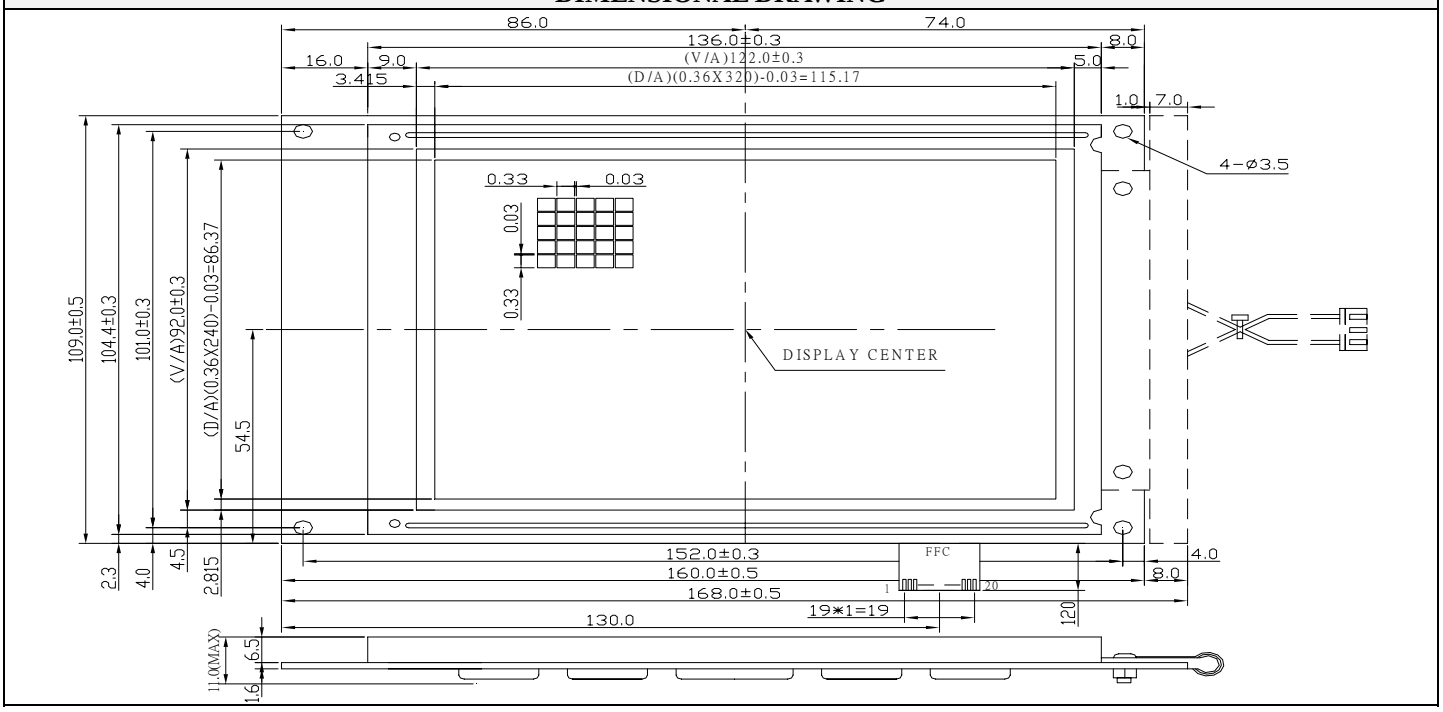
DIMENSIONAL DRAWING